REV	ECA NO.	DESCRIPTION

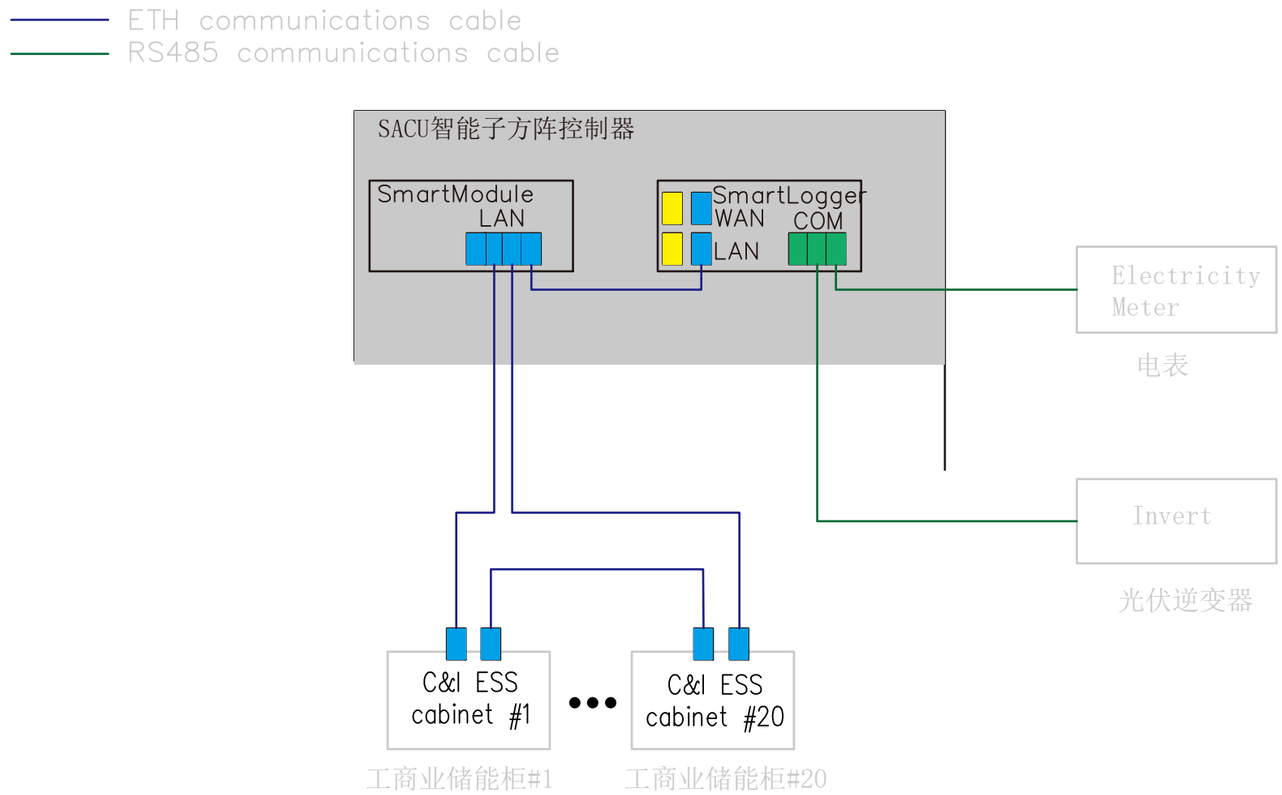

THESE DRAWINGS AND SPECIFICATION ARE THE PROPERTY OF HUAWEI TECH Co.,LTD. AND SHOULD NOT BE REPRODUCED COPIED OR USED IN ANY MANNER WITHOUT THE PRIOR WRITTEN CONSENT OF HUAWEI TECH Co.,LTD.

HUAWEI

DRAW:	DATE:	UNIT'S:	DWG NO.: *
CHKD: /	DATE: /	FINISH: *	DWG VER
VRFD: /	DATE: /	MASS(Kg):	ITEM NO.: *
APPD: /	DATE: /	SCALE:	ITEM REV
PRODUCT: *		SHEET: 1 OF 1	MAT'L:

TITLE: 工商业储能系统通信组网图FE
C&I ESS communication networking diagram FE

RELEASE LEVEL:
FILE NAME:

A3